HW7 = KEY =

Welcome to the homework page test1. If this isn't you then please go back to the homework login page.

You may log out and return later if you wish without losing any saved data. You will have **TEN** attempts for each assigned problem. Every unsuccessful attempt will lower that part of the problem's value by 5%.

For example, if you get it right on the first try, then you will receive 100% for that problem. If you are twice incorrect and submit the correct on the third try, then you will receive a 90% for that part of the problem. You will not recieve any points for that part of the problem after 10 attempts.

You do not have to answer all the problems during a single session or in any particular order. To answer a problem simply type the numerical value in the box provided, check the box to the right of the part(s) you want to answer, and then click the submit button. You can freely log in and out of the homework page without losing any submitted information so feel free to take breaks if necessary.

LET'S BEGIN!

Problem #1

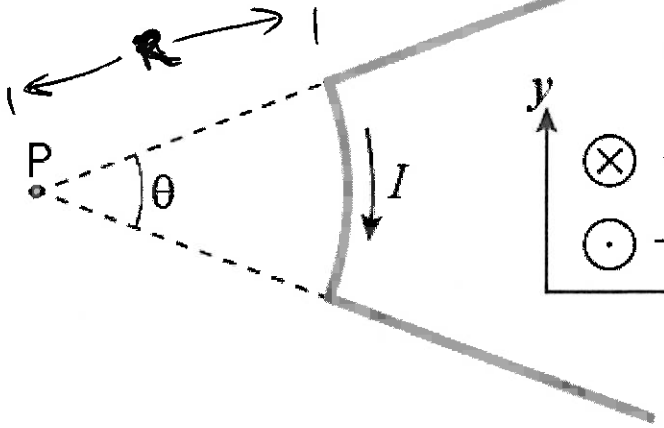

NOTE FROM $d\vec{B} = \frac{\mu_0}{4\pi}\frac{I\,d\vec{\ell}\times\hat{r}}{r^2}$ THERE is NO CONTRIBUTIONS TO THE FIELD AT P COMING FROM THE "STRAIGHT" SECTIONS. SEMICIRCULAR SECTION CONTRIBUTES TO B THERE IN PROPORTION TO ITS PART OF A FULL LOOP

a) $B_{\text{FULL LOOP}} = \frac{\mu_0 I}{2R}$

$B_P = B_{\text{FULL LOOP}} \cdot \frac{\theta}{2\pi} = \frac{\mu_0 I}{2R}\left(\frac{22^\circ}{360^\circ}\right)$

$B_P = \frac{(4\pi\times10^{-7})(5.2)}{2(0.41)} \cdot \frac{22}{360} = 4.87\times10^{-7}\ T$

OR 487 mT

As shown in the above diagram, a wire is shaped with an arc that produces a magnetic field. The arc has a radius of R = 0.410m and carries a current of I = 5.20A. (a) What is the MAGNITUDE of the magnetic field at point P for a wire that is shaped to give θ = 22.0°? (b) What is the MAGNITUDE magnetic field at

point P for a wire that is shaped to give θ = 33.0°?

(b) SIMILAR W/ 22 REPLACED W/ 33.

(a) 487 nT $\hat{z}$ ✓ Answer part (a)

(b) 730 nT $\hat{z}$ ✓ Answer part (b)

Submit

Attempted part (a) 0 times and part (b) 0 times.

There have been no attempts to answer part (a)

There have been no attempts to answer part (b)

---

a) $B = \frac{\mu_0 I_1}{2\pi d} = \frac{\mu_0 (4.2)}{2\pi (.075)} = 0.0000112\,T$

Problem #2

⇒ ATTRACTED TO ONE ANOTHER

Two long, parallel conductors, separated by d = 7.50cm, carry currents in the same direction. The first wire carries a current of I_1 = 4.20A and the second wire carries a current of I_2 = 1.10A. (a) What is the magnitude of the magnetic field created by I_1 at the location of I_2? (b) What is the magnitude of the force per unit length exerted by I_1 on I_2? (c) What is the magnitude of the magnetic field created by I_2 at the location of I_1? (d) What is the magnitude of the force per unit length exerted by I_2 on I_1?

(b) $F = BIl \quad \frac{F}{l} = BI_2 = (11.2\times10^{-6})(1.1)$

$\frac{F}{l} = 12.32\times10^{-6}$

(a) 11.2 μT ✓ Answer part (a)

(b) 12.3 μN/m ✓ Answer part (b)

(c) 2.93 μT ✓ Answer part (c)

$B = \frac{\mu_0 I_2}{2\pi d} = 2.93\times10^{-6}$

(d) 12.3 μN/m Answer part (d)

← THINK NIII TOO!! NEWTON 3RD LAW!!

Submit

Attempted part (a) 0 times, part (b) 0 times, part (c) 0 times, and part (d) 0 times.

There have been no attempts to answer part (a)

There have been no attempts to answer part (b)

There have been no attempts to answer part (c)

There have been no attempts to answer part (d)

Problem #3

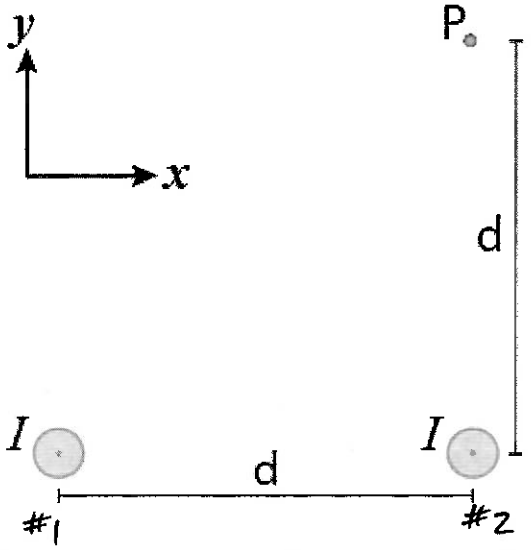

$B = \frac{\mu_0 I}{2\pi d}$ $\quad \vec{B}_{TOT} = \vec{B}_1 + \vec{B}_2$

AND $\vec{B}_2(P) = \frac{\mu_0 I}{2\pi d}(-\hat{x})$ BUT

$\vec{B}_1(P) = \frac{\mu_0 I}{2\pi d'}\left(-\frac{\hat{x}}{\sqrt{2}} + \frac{\hat{y}}{\sqrt{2}}\right)$

$d' = \sqrt{d^2+d^2} = \sqrt{2}d$. THUS, IN VECTOR COMPONENTS

$\vec{B}_2(P) = (-4.8, 0)\ \mu T$

$+\ \vec{B}_1(P) = (-2.4, +2.4)\ \mu T$

$\vec{B}_{TOT} = (-7.2, 2.4)\ \mu T$

Two long, parallel wires carry the same current of I = 3.84A in the positive z-direction as shown in the above diagram. The wires are separated by a distance d = 16.0cm. Find the (a) x-component and (b) y-component of the magnetic field at a point P that is located the same distance d = 16.0cm above the wire on the right.

(a) −7.2 μT $\hat{x}$ ✓ Answer part (a)

(b) 2.4 μT $\hat{y}$ ✓ Answer part (b)

Submit

Attempted part (a) 0 times and part (b) 0 times.

There have been no attempts to answer part (a)

There have been no attempts to answer part (b)

Problem #4

$d = \sqrt{(\ell/2)^2 + (\ell/2)^2} = \ell/\sqrt{2}$

$B = \frac{\mu_0 I}{2\pi d}$ BY SYMM, ALL COMPONENTS ~~CANCEL~~ IN X CANCEL. BUT ADD IN y

SO $B_P = 4\left(\frac{\mu_0 I}{2\pi d}\right)\cdot\frac{1}{\sqrt{2}}$ DOWN. ← COMPONENT.

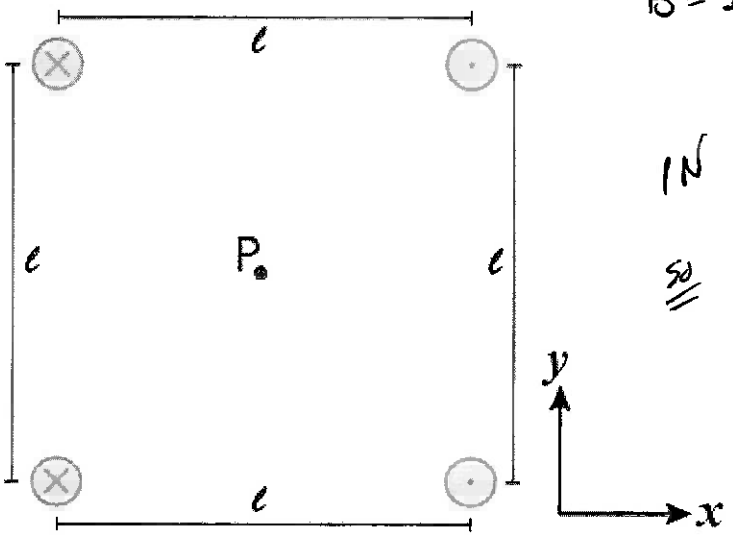

Four long conducting wires run in parallel and carry currents of equal magnitude such that I = 4.15A. As shown in the above diagram, the two wires on the left carry currents into the page while the two wires on the right carry current out of the page, where the direction out of the page is the positive z-direction. In the plane of the page, all four wires make a square where the sides are length ℓ = 11.0cm. Calculate the (a) x-component and (b) y-component of the magnetic field at point P.

(a) 0 μT $\hat{x}$ ✓ Answer part (a)

(b) ~~0~~ −30.2 μT $\hat{y}$ ✓ Answer part (b)

Submit

Attempted part (a) 0 times and part (b) 0 times.

There have been no attempts to answer part (a)

There have been no attempts to answer part (b)

Problem #5

In the Bohr model of a hydrogen-like quantum system, an electron in some energy state moves at a speed of 2.22×10^6m/s in a circular path of radius

5.13×10^{-11}m around a stationary proton. Taking the effective current to be $|e^-|/T$ with T being the period, what is the magnitude of the magnetic field at the location of the proton? ($e^- = -1.602\times10^{-19}$C)

$T = d/v = \frac{2\pi R}{v} = 1.45\times10^{-16}$ s

$I = \frac{e}{T} = \frac{1.6\times10^{-19}}{1.45\times10^{-16}} = 1.1$ mA

$B = \frac{\mu_0 I}{2R} = \frac{(4\pi\times10^{-7})(1.1\times10^{-3})}{2(5.13\times10^{-11})} = 13.4$ T

13.4 T ✓ Answer the question

Submit

Attempted the problem 0 times.

There have been no attempts to answer the problem

Problem #6

ANTIPARALLEL ⇒ REPULSIVE FORCE BETWEEN WIRES.

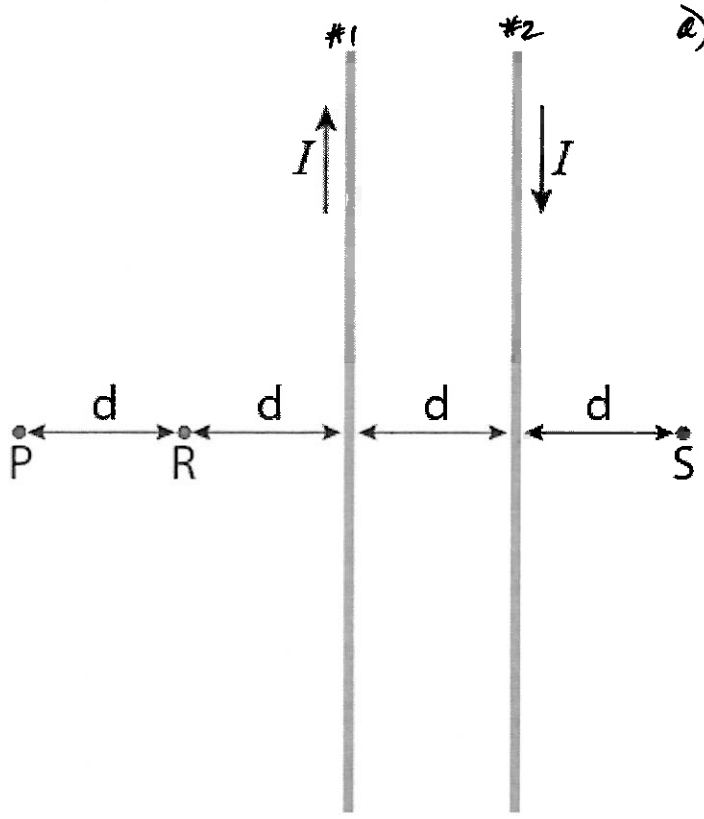

a) AT P $B_1 = \frac{\mu_0 I}{2\pi(2d)}$ OUT OF PAGE

$B_2 = \frac{\mu_0 I}{2\pi(3d)}$ INTO PAGE

$\Rightarrow B_{TOT} = \frac{\mu_0 I}{2\pi d}\left(\frac{1}{2} - \frac{1}{3}\right) = \frac{\mu_0 I}{12\pi d}$ OUT OF PAGE

$= 1.8\,\mu$T

b) $B_1 = \frac{\mu_0 I}{2\pi d}$ OUT OF

$B_2 = \frac{\mu_0 I}{2\pi(2d)}$ INTO

$B_{TOT} = \frac{\mu_0 I}{2\pi d}\left(1 - \frac{1}{2}\right) = 5.4\,\mu$T

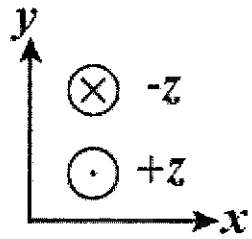

Two wires that each carry a current of I = 5.95A run parallel to the y-axis, where the positive x-direction is to the right and the positive z-direction points out of the page as illustrated in the above diagram. The characteristic distance d = 11.0cm separates the two wires and equally spaces three of the four points of interest. Find the magnetic field at (a) point P, (b) point R, and (c) point S. (d) What is the magnetic field at the midpoint between the two wires?

(a) +1.8 μT $\hat{z}$ ☑ Answer part (a)

(b) +5.4 μT $\hat{z}$ ☑ Answer part (b)

(c) −5.4 μT $\hat{z}$ ☐ Answer part (c)

(d) 0 μT $\hat{z}$ ☐ Answer part (d)

c) B_1 = . . . JUST LIKE PART b BUT UPSIDE DOWN!!

3

→ THEY CANCEL.

Submit

Attempted part (a) 0 times, part (b) 0 times, part (c) 0 times, and part (d) 0 times.

There have been no attempts to answer part (a)

There have been no attempts to answer part (b)

There have been no attempts to answer part (c)

There have been no attempts to answer part (d)

Problem #7

LIKE CHARGE DISTRIBUTION INTEGRATION PROBLEMS, THIS WE HAVE TO INTEGRATE OVER CURRENTS MAKING UP THE RIBBON!!

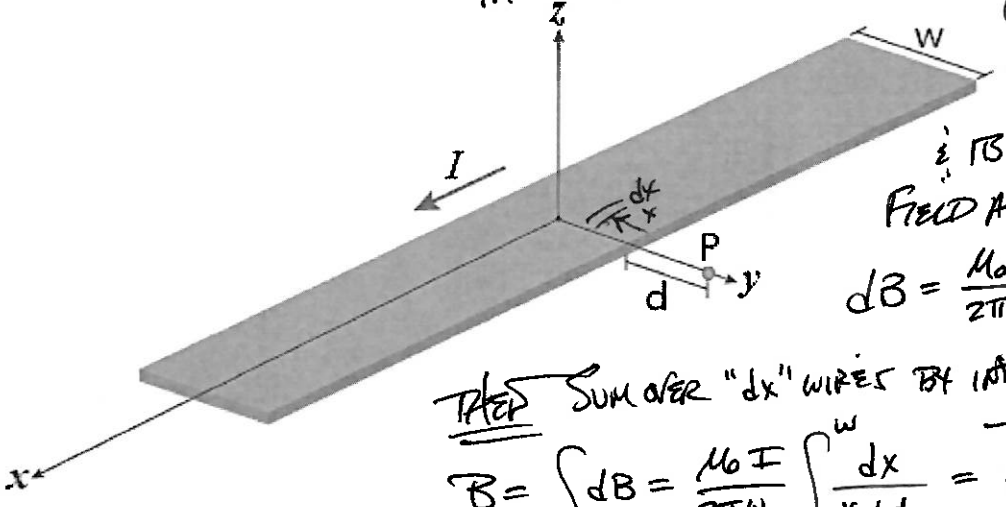

IN SECTION dx, AS A WIRE, CARRIES

$$dI = \frac{I}{w}\,dx$$

∴ ITS CONTRIBUTION IT MAKES TO FIELD AT "y" IS

$$dB = \frac{\mu_0\, dI}{2\pi(d+x)} = \frac{\mu_0 I\, dx}{2\pi w (d+x)}$$

TAKE SUM OVER "dx" WIRES BY INTEGRATING FROM x=0 TO x=w

$$B = \int dB = \frac{\mu_0 I}{2\pi w}\int_0^w \frac{dx}{x+d} = \frac{\mu_0 I}{2\pi w}\ln\left(\frac{w+d}{d}\right)$$

As illustrated above, a long and thin strip of metal of width w = 7.40cm carries a current of magnitude I = 5.85A along the x-axis in which it is oriented, where the current is uniformly distributed across its width. What is the magnetic field

at a point P, which is located a distance d = 10.5cm from the edge of the metal strip?

PUT IS #5'.

13.97 μT $\hat{z}$ Answer the question → 13.9 μT

Submit

Attempted the problem 0 times.

There have been no attempts to answer the problem

Problem #8

$A = \ell^2$

$\Phi_M = \vec{B} \cdot \vec{A} = \ell^2 \cdot B_x$

$\Phi_M = (3.9)^2 (3.0)$

$= 45.63$

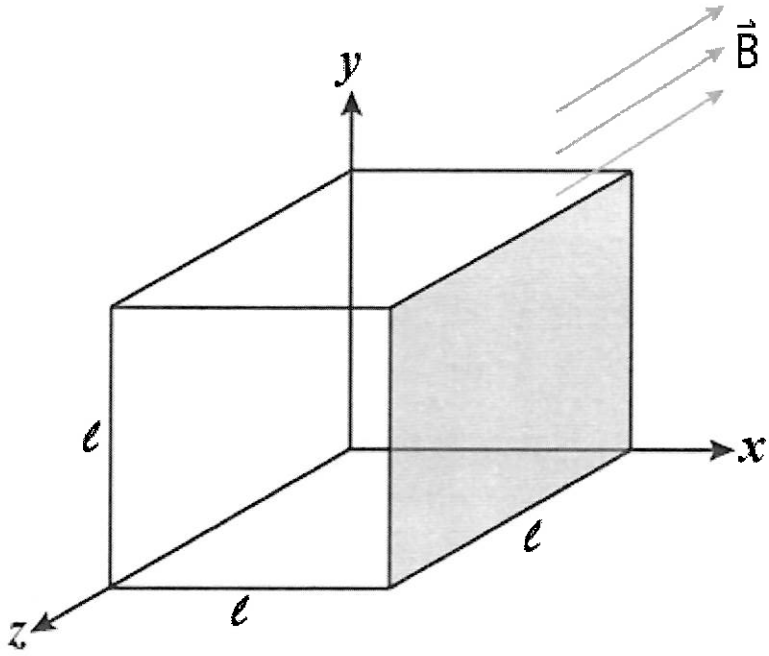

A cube of side length ℓ = 3.90m is oriented as shown in the above illustration. A uniform magnetic field given by $\mathbf{B} = (3.00\hat{x} + 4.00\hat{y} + 6.00\hat{z})$T is present throughout the region. (a) What is the magnetic flux through the shaded face? (b) What is the total magnetic flux through all six faces of the cube?

(a) 45.63 T·m^2 Answer part (a)

(b) 0 T·m^2 ✓ Answer part (b) ← WHAT GOES IN, MUST GO OUT. ⇒ NO NET FLUX INTO CUBE

Submit